sferaco
VALVES & FITTINGS

REF. 235

CARBON STEEL Y STRAINER PN 40

ISO 9001
BUREAU VERITAS
Certification

Size :	DN 15 to DN 200
Ends :	Flanged R.F. ISO PN25/40
Min Temperature :	- 20°C
Max Temperature :	+ 400°C
Max Pressure :	40 Bars
Specifications :	Stainless steel removable filter Bolted bonnet with draining cap

Materials : Carbon steel

Sferaco 90 rue du Ruisseau 38297 St Quentin Fallavier Tel: + 33 (0) 474.94.15.90 Fax: + 33 (0) 474.95.62.08 Internet: www.sferaco.fr E-mail : sferaco@sferaco.fr

Information provided as an indication and subject to possible modification

CARBON STEEL Y STRAINER PN 40

SPECIFICATIONS :

- Removable stainless steel filter
- R.F. Flanged ISO PN25/40 , ISO PN40 for DN200
- Horizontal or vertical position with descendant fluid (respect the flow direction indicated by the arrow)
- Mesh 1mm up to DN 50 , 1.25 mm from DN 65 to 80 and 1.6 mm over
- Bolted bonnet with draining cap threaded BSP
- Blue painting RAL 5002, 120 µm thickness

USE :

- For all common fluids
- Min Temperature Ts : - 20°C
- Max Temperature Ts :+ 400°C
- Max Pressure Ps : 40 bars (see graph)

PRESSURE / TEMPERATURE GRAPH (STEAM EXCLUDED) :

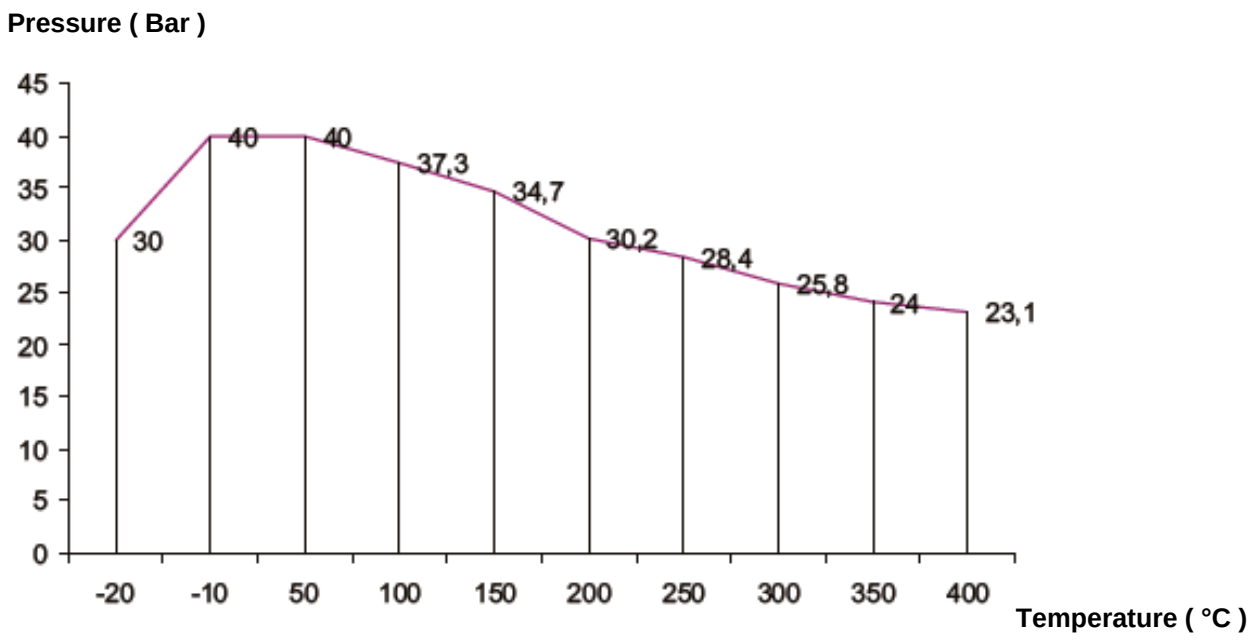

FLOW COEFFICIENT Kvs (M3 / h) :

DN	15	20	25	32	40	50	65	80	100	125	150	200
Kvs (m3/h)	5.7	10.4	16.4	27.3	42	64.7	98	149	234	376	454	853

CARBON STEEL Y STRAINER PN 40

HEAD LOSS :

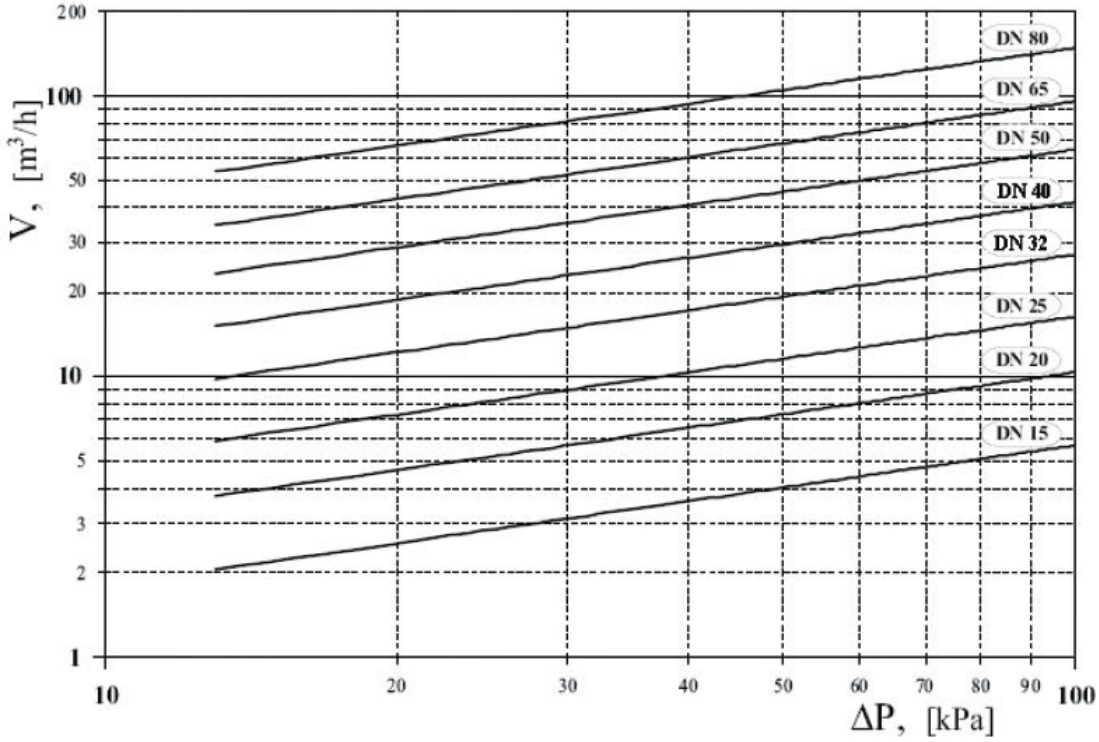

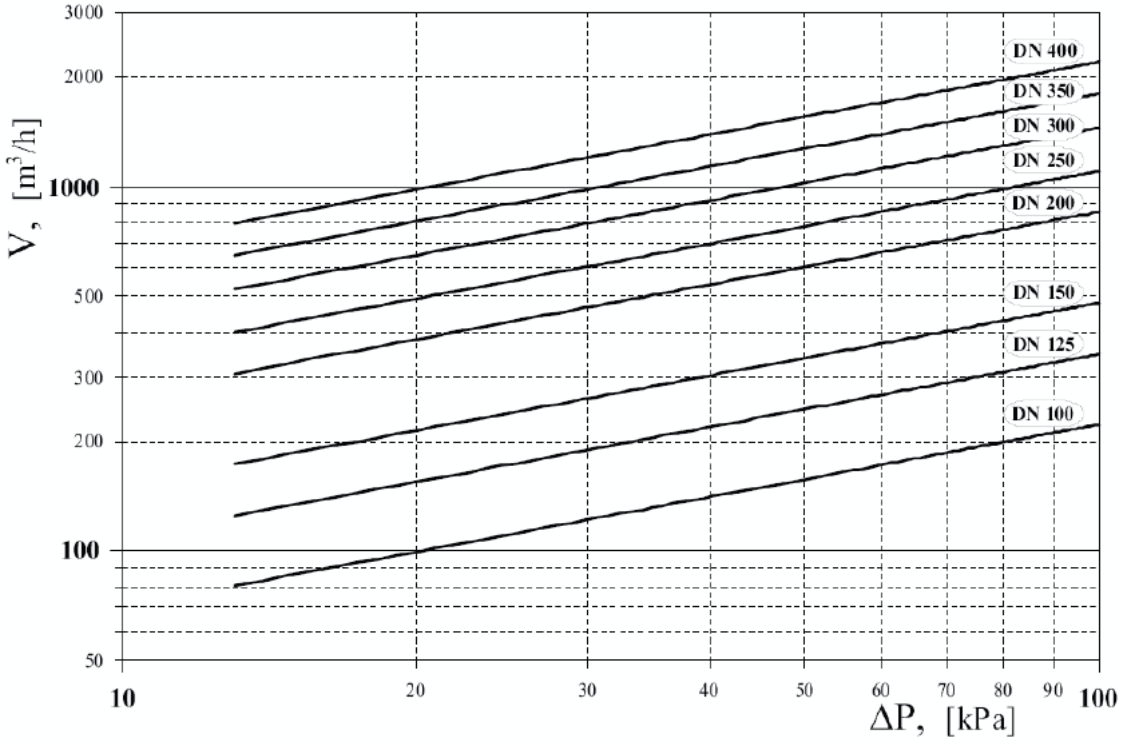

Information provided as an indication and subject to possible modification

CARBON STEEL Y STRAINER PN 40

RANGE :

- Carbon steel flanged R. F. ISO PN25/40 DN 15 up to DN 150 and ISO PN40 for DN200 **Ref.235**

MATERIALS :

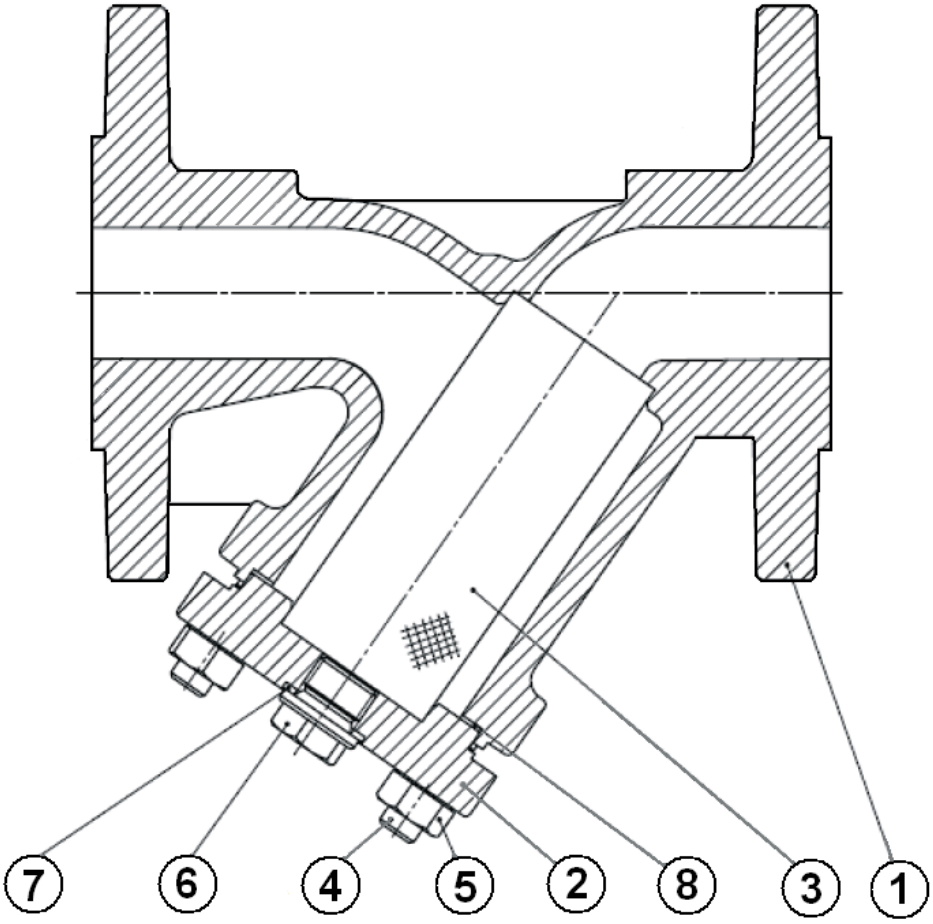

Item	Designation	Materials
1	Body	ASTM A 216 WCB
2	Bonnet	ASTM A 216 WCB
3	Filter	SS 304
4	Studs	25CrMo4
5	Nut	C35E
6	Emptying screw	C35E
7	Plug gasket	A4 1.4571
8	Bonnet gasket	Graphite

REF. 235

CARBON STEEL Y STRAINER PN 40

SIZE (in mm) :

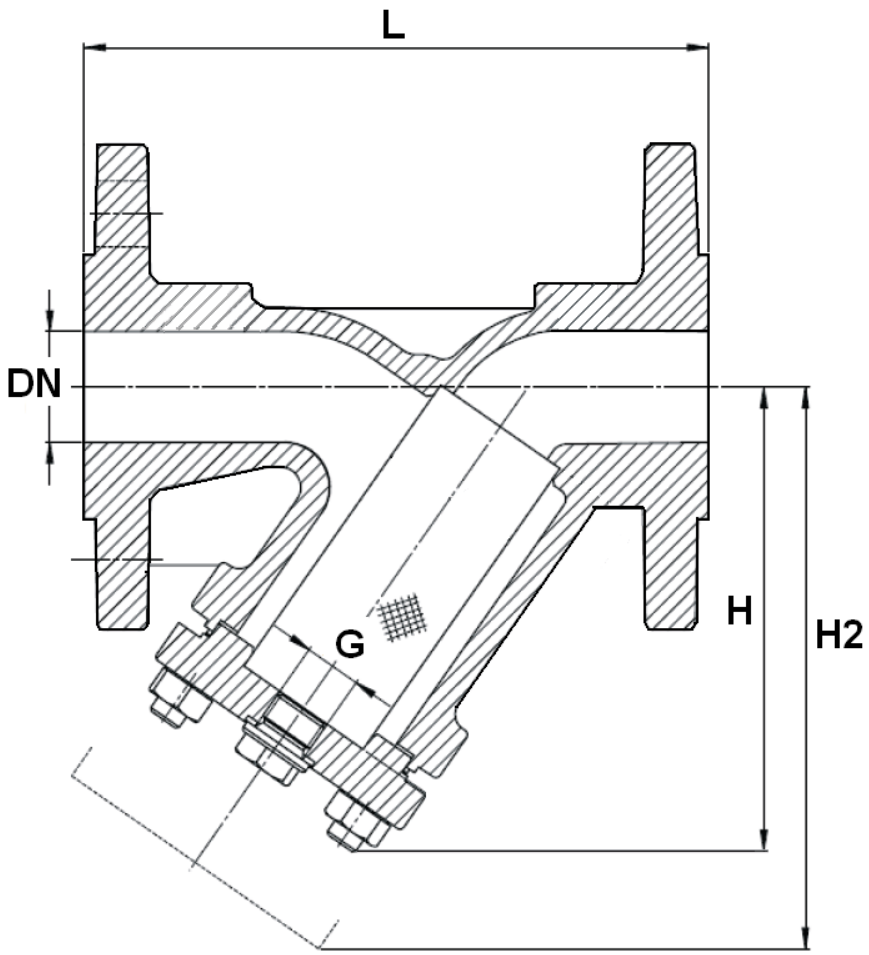

Filter size :

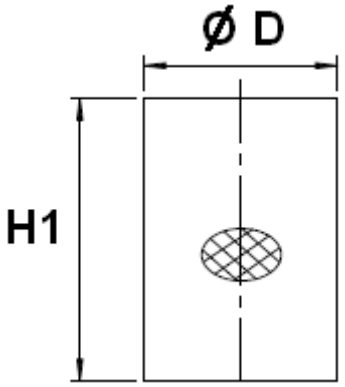

Ref.	DN	15	20	25	32	40	50	65	80	100	125	150	200
235	L	130	150	160	180	200	230	290	310	350	400	480	600
	H	90	100	115	135	150	160	180	215	235	280	320	405
	H2	135	150	180	215	240	250	285	330	365	425	480	610
	G (Cap)	3/8“	3/8“	3/4“	3/4“	1“	1“	1“	1“	1“1/2	1“1/2	1“1/2	1“1/2
	Ø D	23	28	36	42	50	61.5	78.5	89.5	109.5	137.5	160	210
	H1	56	68	82	98	114	119	134	149	169	199	224	284
	Mesh	1	1	1	1	1	1	1.25	1.25	1.6	1.6	1.6	1.6
	Weight (Kg)	2.65	3.8	4.8	6.9	9.5	11.9	16.9	22.1	31.6	54	75	137

Sferaco 90 rue du Ruisseau 38297 St Quentin Fallavier Tel: + 33 (0) 474.94.15.90 Fax: + 33 (0) 474.95.62.08 Internet: www.sferaco.fr E-mail : sferaco@sferaco.fr

Information provided as an indication and subject to possible modification

CARBON STEEL Y STRAINER PN 40

FLANGES SIZE (in mm) :

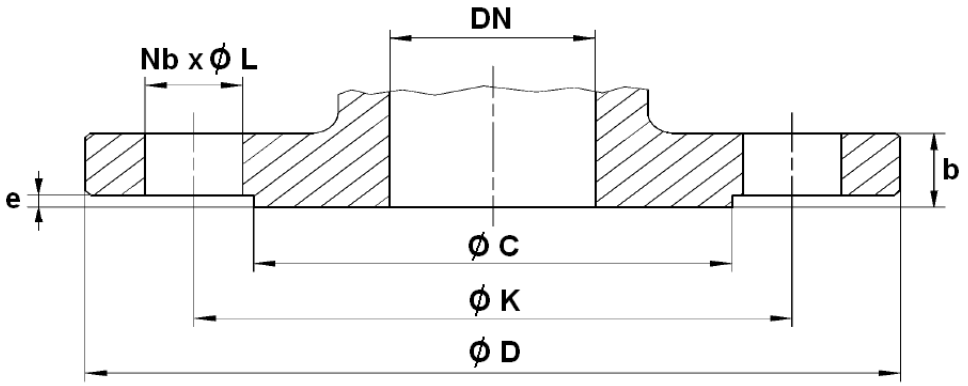

DN	15	20	25	32	40	50	65	80	100	125	150	200
Ø C	45	58	68	78	88	102	122	138	162	188	218	285
Ø D	95	105	115	140	150	165	185	200	235	270	300	375
Ø K	65	75	85	100	110	125	145	160	190	220	250	320
Nb x Ø L	4 x 14	4 x 14	4 x 14	4 x 18	4 x 18	4 x 18	8 x 18	8 x 18	8 x 22	8 x 26	8 x 26	12 x 30
b	16	18	18	18	18	20	22	24	24	26	28	34
e	2	2	2	2	3	3	3	3	3	3	3	3

Sferaco 90 rue du Ruisseau 38297 St Quentin Fallavier Tel: + 33 (0) 474.94.15.90 Fax: + 33 (0) 474.95.62.08 Internet: www.sferaco.fr E-mail : sferaco@sferaco.fr

Information provided as an indication and subject to possible modification

CARBON STEEL Y STRAINER PN 40

STANDARDS :

- Fabrication according to ISO 9001 : 2008
- DIRECTIVE 97/23/CE : CE N° 0062
  Risk Category III Module H
- Tests according to EN 12266-1
- Length according to EN 558 series 1 (DIN 3202 – NF 29354)
- Approval certificate Russian Federation **GOST-R**
- Flanges R.F. according to EN 1092-1 PN40

INSTALLATION POSITIONS :

Vertical position (descendand fluid)

Horizontal position

ADVICE : Our opinion and our advice are not guaranteed and SFERACO shall not be liable for the consequences of damages.
The customer must check the right choice of the products with the real service conditions.

CARBON STEEL Y STRAINER PN 40

INSTALLATION INSTRUCTIONS

GENERAL GUIDELINES :

- Ensure that the strainers to be used are appropriate for the conditions of the installation (type of fluid,pressure and temperature).
- Be sure to have enough valves to be able to isolate the sections of piping as well as the appropriate equipment for maintenance and repair.
- Ensure that the strainers to be installed are of correct strenght to be able to support the capacity of their usage.
- **Installation of all circuits should ensure that their function can be automatically tested on a regular basis (at least two times a year).**

INSTALLATION INSTRUCTIONS :

- **Before installing the strainers, clean and remove any objects from the pipes** (in particular bits of sealing and metal) which could obstruct and block the strainers.

- **Ensure that both connecting pipes either side of the strainer (upstream and downstream) are aligned (if they're not, the strainer may not work correctly).**

- **Make sure that the two sections of the pipe (upstream and downstream) match, the strainer unit will not absorb any gaps. Any distortions in the pipes may affect the thightness of the connection, the working of the strainer and can even cause a rupture.** To be sure, place the kit in position to ensure the assembling will work.

- Make sure flanges are cleaned.

- **If sections of piping do not have their final support in place, they should be temporarily fixed. This is to avoid unnecessary strain on the strainer.**

- Tighten the bolts in cross.

- The pressurisation must be increased gradually.

- So that the maintenance operations could be easily done, place a stop valve before and after the strainer.Thereby, the strainer could be isolated. During this operation, ensure to have a new bonnet gasket to avoid a leakage during the restarting.

- **Fluids in the strainer must not contain solid objects (it could damaged the seat).**

Sferaco 90 rue du Ruisseau 38297 St Quentin Fallavier Tel: + 33 (0) 474.94.15.90 Fax: + 33 (0) 474.95.62.08 Internet: www.sferaco.fr E-mail : sferaco@sferaco.fr

Information provided as an indication and subject to possible modification